CLAMP250

owner's manual (EN)

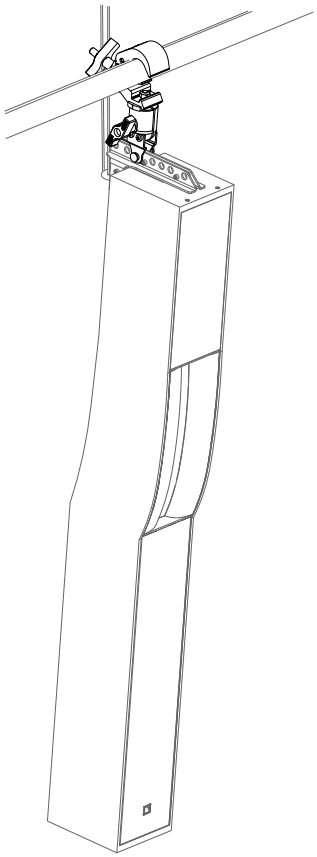

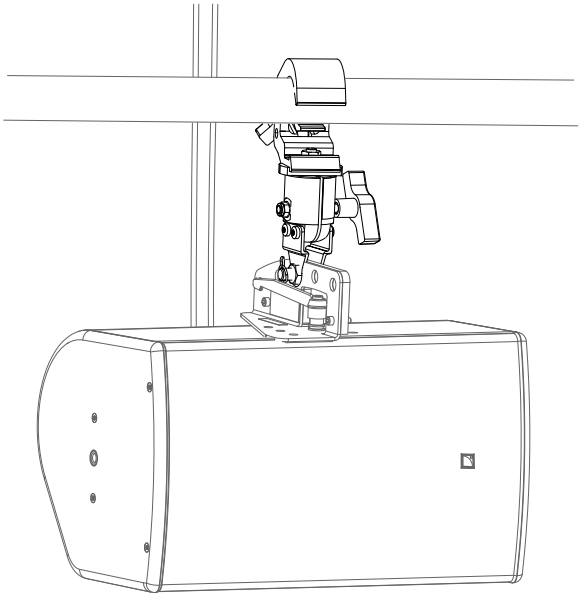

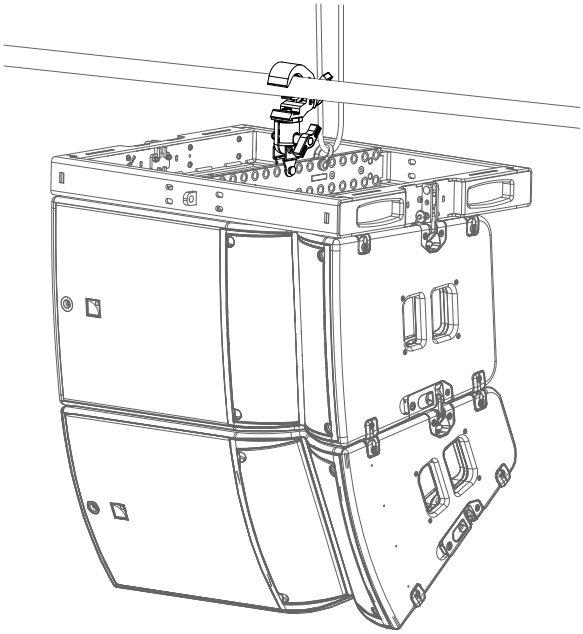

Document reference: CLAMP250 owner's manual (EN) version 1.0
Distribution date: March 18, 2021
© 2021 L-Acoustics. All rights reserved.
No part of this publication may be reproduced or transmitted in any form or by any means without the express written consent of the publisher.

Contents

Safety.....4
Instructions.....4
Introduction.....6
How to use this manual.....6
Rigging system description.....7
Mechanical safety.....9
Inspection and preventive maintenance.....11
How to do preventive maintenance.....11
Visual inspection.....12
Rigging check.....13
Specifications.....14

Safety

Instructions

Inspect the system before any deployment.

Perform safety related checks and inspections before any deployment.

Perform preventive maintenance at least once a year.

Refer to the preventive maintenance section for a list of actions and their periodicity.

Insufficient upkeep of the product can void the warranty.

If any safety issue is detected during inspection, do not use the product before performing corrective maintenance.

Check for issues. A rigging system part or fastener is missing or loose. A rigging system part exhibits: bends, breaks, broken parts, corrosion, cracks, cracks in welded joints, deformation, denting, wear, holes. A safety cue or label is missing. A loose part is not adequately secured.

Never incorporate equipment or accessories not approved by L-Acoustics.

Read all the related PRODUCT INFORMATION documents shipped with the products before exploiting the system.

Do not store the product on an unstable cart, stand, tripod, bracket, or table.

Work with qualified personnel for rigging the system

Installation should only be carried out by qualified personnel that are familiar with the rigging techniques and safety recommendations outlined in this manual.

Ensure personnel health and safety

During installation and set-up personnel must wear protective headgear and footwear at all times. Under no circumstances is personnel allowed to climb on a loudspeaker assembly.

Respect the Working Load Limit (WLL) of third party equipment.

L-Acoustics is not responsible for any rigging equipment and accessories provided by third party manufacturers.

Verify that the Working Load Limit (WLL) of the suspension points, chain hoists and all additional hardware rigging accessories is respected.

Respect the maximum configurations and the recommended safety precautions.

For safety issue, respect the maximum configurations outlined in this manual. To check the conformity of any configuration in regards with the safety precautions recommended by L-Acoustics, model the system in Soundvision and refer to the warnings in Mechanical Data section.

Be cautious when flying a loudspeaker configuration.

Before installing/raising the product, check each individual element to make sure that it is securely fastened to the adjacent element. Always verify that no one is standing underneath the product when it is being installed/raised. Never leave the product unattended during the installation process.

As a general rule, L-Acoustics recommends the use of secondary safety at all times.

Be cautious when ground-stacking a loudspeaker array.

Do not stack the loudspeaker array on unstable ground or surface. If the array is stacked on a structure, platform, or stage, always check that the latter can support the total weight of the array.

As a general rule, L-Acoustics recommends the use of safety straps at all times.

Risk of falling objects

Verify that no unattached items remain on the product or assembly.

Risk of tipping

Remove all rigging accessories before transporting a product or an assembly.

Take into account the wind effects on dynamic load.

When a loudspeaker assembly is deployed in an open air environment, wind can produce dynamic stress to the rigging components and suspension points.

If the wind force exceeds 6 bft (Beaufort scale), lower down and/or secure the product or the assembly.

Intended use

This system is intended for use by trained personnel for professional applications.

As part of a continuous evolution of techniques and standards, L-Acoustics reserves the right to change the specifications of its products and the content of its documents without prior notice.

Check www.l-acoustics.com on a regular basis to download the latest document and software updates.

Long term exposure to extreme conditions may damage the product.

For more information, refer to the **Products weather protection** document, available on the website.

This marking indicates that this product should not be disposed of with other household waste throughout the EU. To prevent possible harm to the environment or human health from uncontrolled waste disposal, recycle it responsibly to promote the sustainable reuse of material resources. To return your used device, please use the return and collection systems or contact the retailer where the product was purchased. They can take this product for environmentally safe recycling.

Introduction

How to use this manual

The CLAMP250 owner's manual provides information about using CLAMP250 as a rigging accessory for enclosure systems. It is intended to be used together with the owner's manual of the main enclosure system.

1. Read the product description.
   - Rigging system description (p.7)
2. Identify compatible products to prepare the system configuration. Consider the mechanical limits and safety precautions.
   - Mechanical safety (p.9)
3. Before rigging the system, perform mandatory inspections and functional checks.
   - Inspection and preventive maintenance (p.11)

As part of a continuous evolution of techniques and standards, L-Acoustics reserves the right to change the specifications of its products and the content of its document without prior notice. Please check www.l-acoustics.com on a regular basis to download the latest document and software updates.

Contact information

For information on advanced corrective maintenance:

- contact your Certified Provider or your L-Acoustics representative
- for Certified Providers, contact the L-Acoustics customer service: customer.service@l-acoustics.com

Symbols

The following symbols are used in this document:

This symbol indicates a potential risk of harm to an individual or damage to the product.
It can also notify the user about instructions that must be strictly followed to ensure safe installation or operation of the product.

This symbol notifies the user about instructions that must be strictly followed to ensure proper installation or operation of the product.

This symbol notifies the user about complementary information or optional instructions.

Rigging system description

CLAMP250 is a quick trigger clamp designed to hang an L-Acoustics enclosure array from a truss.

It can lift up to 250 kg (550 lb).

CLAMP250 must only be used for vertical loads.

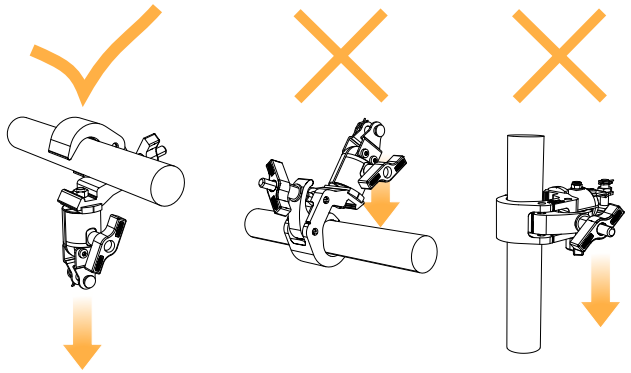

CLAMP250 is secured to the rigging accessory with a Ø 12 mm (0.5 in) rigging axis. The rigging axis is fitted with an M12 nut and a safety pin. Refer to Mechanical safety for compatible accessories.

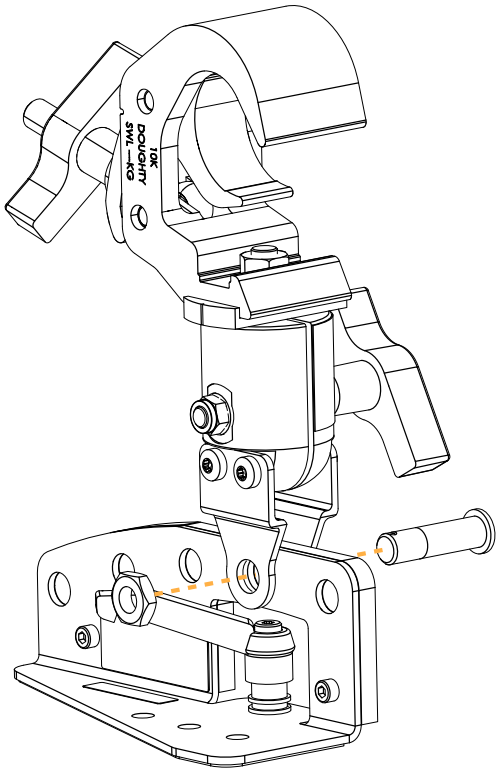

Tighten the nut by hand.

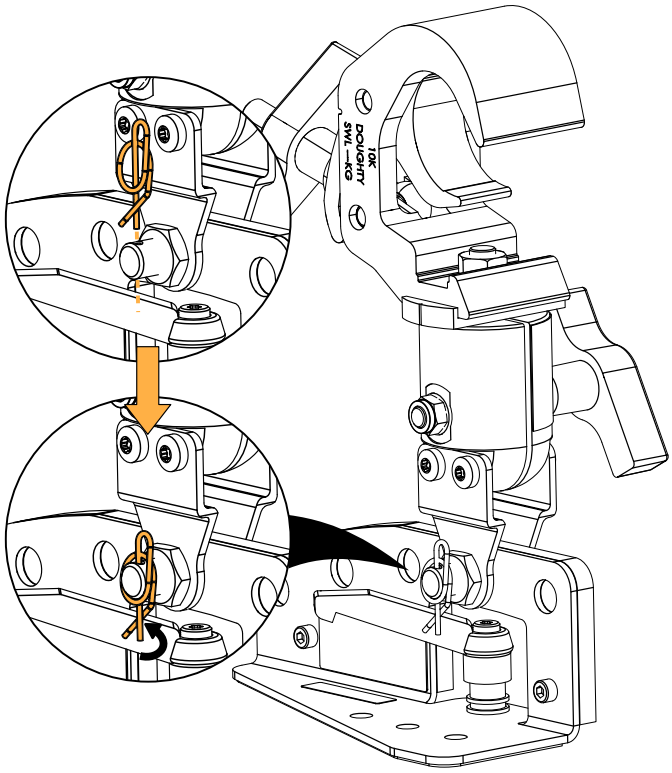

Insert the safety pin in the rigging axis and lock it.

A wing knob allows to tighten the clamp to a Ø 38 - 51 mm (1.5 - 2 in) tube. A second knob is available to lock the azimuth angle.

Tighten the wing knobs by hand only.

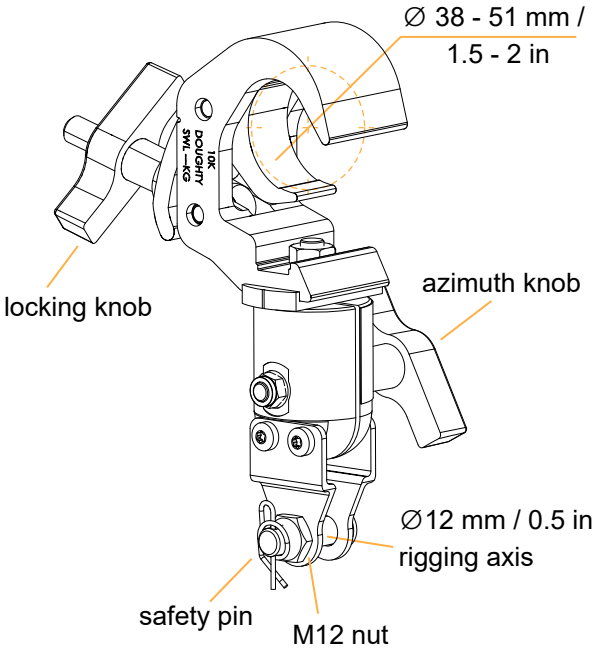

Mechanical safety

Flown configurations

The CLAMP250 rigging system complies with 2006/42/EC: Machinery Directive. It has been designed following the guidelines of BGV-C1.

2006/42/EC: Machinery Directive specifies a safety factor of 4 against the rupture. The flown deployments described in this manual achieve a safety factor of **7 or more**.

CLAMP250 has a WLL (Working Load Limit) of **250 kg** / **550 lb**.

Products compatible with CLAMP250

Maximum limit with CLAMP250
Do not exceed the **250 kg** / **550 lb** WLL (Working Load Limit) of CLAMP250.
Check the total weight of the array in Soundvision.

Enclosure	Rigging element(s)
X8 / X12 / X15 HiQ	X-BAR
Syva	Syva Bar
A10 Wide/Focus	A10-BUMP / A10-RIGBAR / A10-LIFT / X-BAR
A10i Wide/Focus	A10i-BUMP / A10i-RIGBAR / A10i-LIFT
A15 Wide/Focus	A15-BUMP / A15-RIGBAR / A15-LIFT / X-BAR
A15i Wide/Focus	A15i-BUMP / A15i-RIGBAR / A15i-LIFT
Kiva II	KIBU II / KIBU-SB
Kara II	KARA-MINIBU
Kara IIi	KARAIIi-RIGBAR
SB15m	KIBU-SB
SB18	KARA-MINIBU + KARA-MINIBUEX
SB18 IIi	KARAIIi-RIGBAR
KS21	A15-BUMP / A15-RIGBAR
KS21i	A15i-BUMP / A15i-RIGBAR

Assessing mechanical safety

Additional safety for flown arrays with CLAMP250

Always implement a secondary safety using a shackle and a steel wire rope. Use available holes on the rigging element or secure a DIN-580 eye bolt on the dedicated insert on the enclosure.

Make sure the steel rope is as tensed as possible without bearing the load.

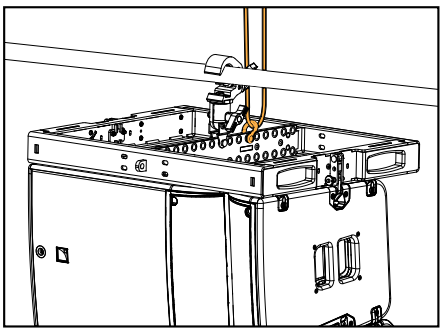

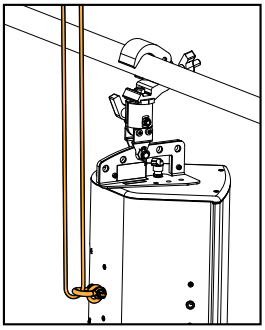

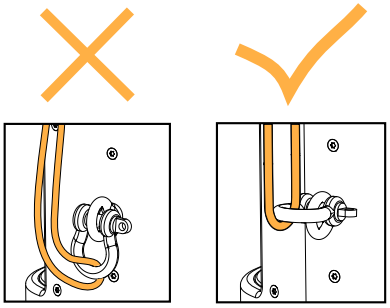

Mechanical safety of the rigging system

Information about the safety of enclosure arrays is not provided in this document.

Refer to the corresponding system owner's manual.

Inspection and preventive maintenance

How to do preventive maintenance

Inspect the system before any deployment and after any corrective maintenance operation.

Perform preventive maintenance at least once a year.

Rigging and hardware

Perform the Visual inspection (p.12).

Do the Rigging check (p.13).

If any parts are damaged, contact your L-Acoustics representative for further instructions.

Visual inspection

Prerequisite

Perform the inspection in a well-lit environment.

Procedure

1. Check the product for:
   - corrosion
   - wear and cracks
   - bends and dents
   - deformation
   - holes
   - missing safety cues
   - missing identification labels
2. Check that all screws and nuts are tightened.

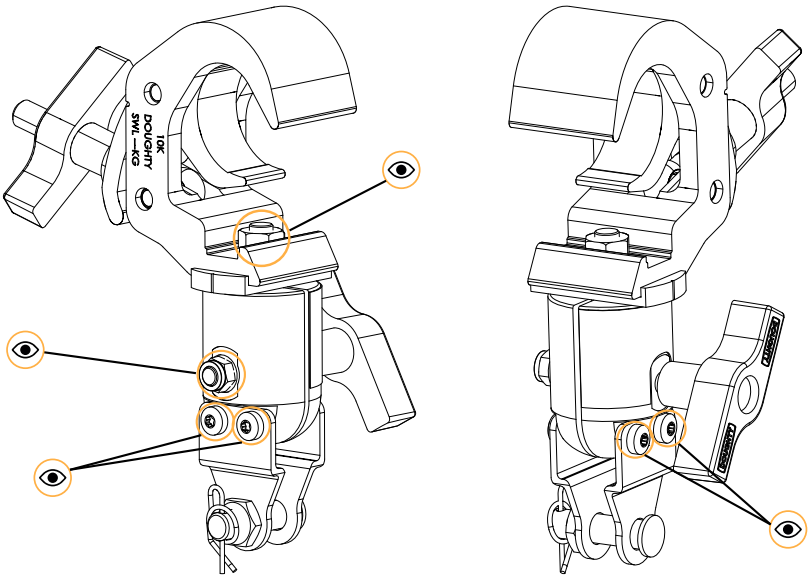

Replacing screws

If a screw is loose, remove and replace it.
Always use the new screws provided in the repair kit.
If no new screw is available, add blue threadlocker before reusing the screw.
Do not apply more than the indicated torque.

What to do next

If a problem is detected, contact your L-Acoustics representative.

Rigging check

About this task

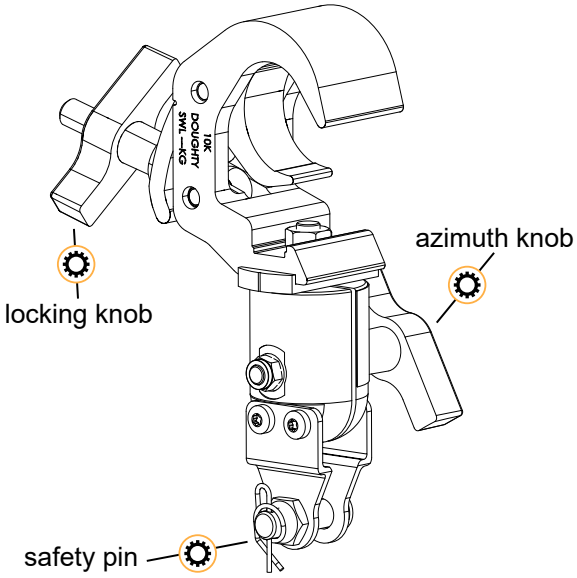

Procedure

1. Loosen and tighten the (top) locking knob.
   - The knob can be tightened and loosened by hand.
   - The clamp opens up when the knob is loosened.
   - The clamp closes when the knob is tightened.
2. Loosen and tighten the (bottom) azimuth knob.
   - The knob can be tightened and loosened by hand.
   - The top part can be rotated when the knob is loosened.
   - The rotation is blocked when the knob is tightened.
3. Remove and insert the safety pin.

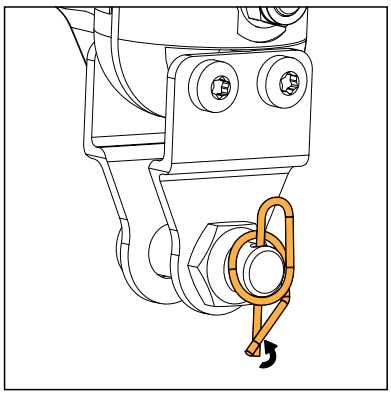

unlocked position

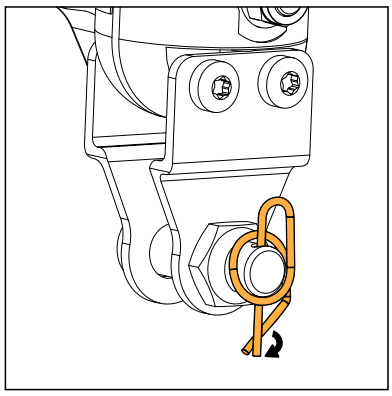

locked position

   - The safety pin is not missing or damaged.
   - The pin can be removed and inserted by hand.
   - The pin cannot be removed when it is in locked position.

What to do next

If a problem is detected, contact your L-Acoustics representative.

Specifications

CLAMP250 specifications

Description	Clamp certified for 250 kg
Weight (net)	1.8 kg / 4 lb
Material	high grade steel with anti-corrosion coating

CLAMP250 dimensions

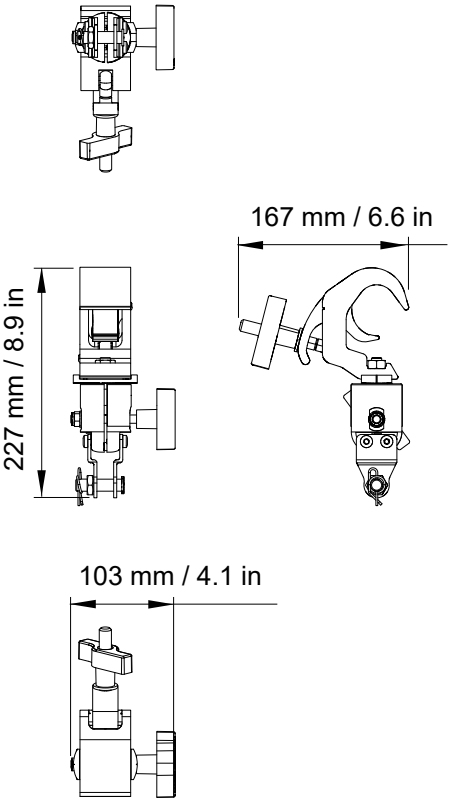

L-Acoustics
13 rue Levacher Cintrat - 91460 Marcoussis - France
+33 1 69 63 69 63 - info@l-acoustics.com
www.l-acoustics.com

L-ACOUSTICS
GROUP